UFO How-To

THE FREE E-BOOK

This is a free electronic book.

You can download this book for free at
http://www.ufohowto.com

If you paid for it, you were scammed.

Report the seller to your state's attorney general.

This book is copyright 2008, but the author gives you permission to distribute this book freely as long as you do not change any of the content herein or charge any money for this book.

The SPACE RACE is on, and you can be a part of it. Contained in the UFO How-To series are the technical layouts for aerospace craft that anyone can access and build.

You can be a part, maybe even a leader, in the coming economic expansion into space industries.

How UFOs Work

Mankind has the ability to build UFOs. The answer to How UFOs work has been released to the public by the government. Actually, it's been available for almost 100 years now. It's just that no one knew where to look for the answers.

This book will help you understand how they work.

The UFO How-To series has over six and a half thousand[1] (6500+) pages to it, 99% of which is complete patent information. Over four thousand[2] (4000+) pages are devoted to UFO craft and their propulsion systems, over eighteen hundred[3] (1800+) are showing the complete patents of power systems that can be used for UFO craft, homes, and even automobiles.

But you *don't* need to read all those pages, or even understand all those pages to understand how UFOs operate. To make it easier, I broke them down into six main categories:

1) Air powered. Some of the oldest patents are air foil discs and giant blowers.
2) Electrogravitic. Large voltages of electricity pulsed into the right receivers.
3) Plasma Propulsion. Think of rockets that run on lightning. Or David Adair.
4) Magnetohydrodynamic. These are the 'glowing balls of light' people see.

[1] 6632 pages to be exact, not including "The Basics."
[2] 4165 pages.
[3] 1867 pages.

5) Fusion. A catch all category for fusion, fission, and antimatter drives.
6) Inertial. Mechanical momentum powered craft.

You can choose which area you want to start, because the first six books of the UFO How-To series are divided as above. All except the first book, "100 Years of UFO Patents." That first book has all kinds of UFOs in it, from the first "Aerial Machine" to the "Gyro Stabilized Flying Saucer" to the "Gravitational Wave Propulsion System."

People You Ought To Know About

The following people are 'persons of interest' in the history and development of the modern human built UFO. Each one of them has played a critical role in the science of UFO propulsion systems, and has a portion of the UFO How-To series.

Nikola Tesla: In 1884 Tesla came to America with four cents in his pocket and a notebook under his arm. In that notebook were the plans for "the perfect flying machine," the UFO.

This man gave the United States 117 patents, was the father of alternating current, radio, neon lighting, automotive distributors, remote control… and would have given the world free power, global communication, and the ability to travel anywhere on the planet in seconds, back in 1905. But he was shut down by the money powers. Unfortunately for the money powers, he inspired others to follow in his footsteps. This is great for the rest of us, because, Tesla never patented his UFO plans. He was too

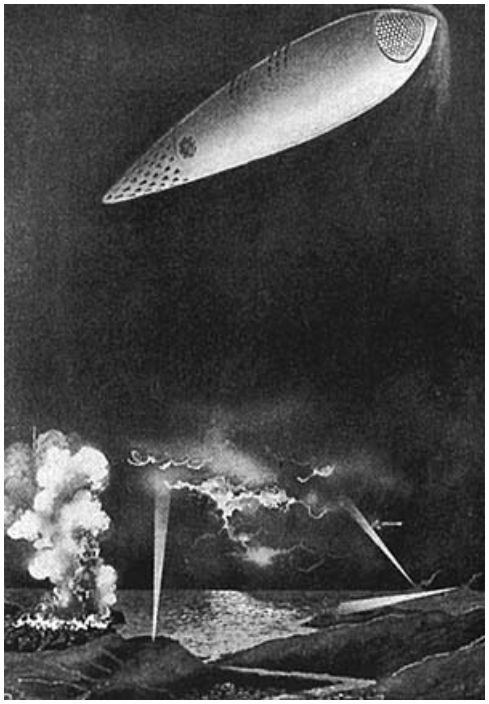

concerned that those in power would use the UFO as a weapon of war, being able to cause a blitzkrieg in mere seconds, re-supplying weapons in seconds, returning in seconds, ultimately raining down months worth of devastation in minutes. Tesla felt that the plans were best kept by him, to prevent the horrors of war from being magnified to a level never before seen. (You can read more about Tesla in Volume II of the UFO How-To series, "Electrogravitics.) But by the time he shifted his self-perception to that of guardian of the UFO secret, he had already inspired a young T. Townsend Brown to follow in his footsteps as researcher extraordinaire.

Thomas Townsend Brown: Brown's legacy is documented in his patents, a progression of understanding how high voltage pulses cause capacitors to lurch, and how that lurching ("electrokinetic movement") could be harnessed for flight.

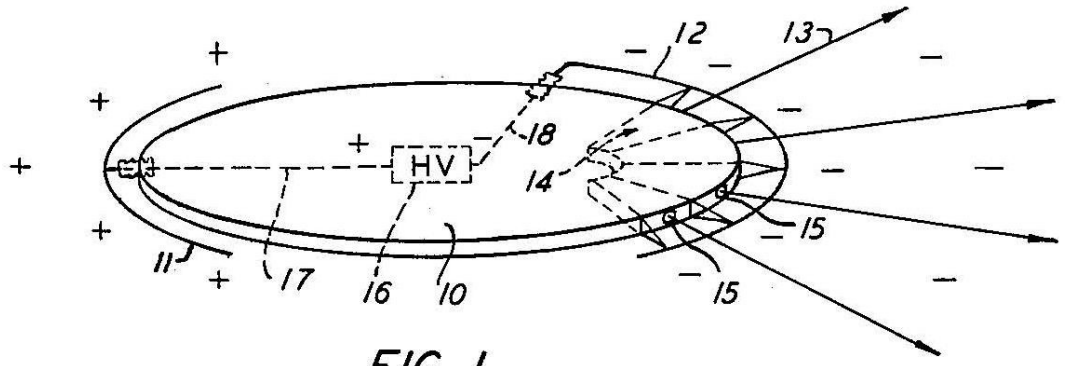

FIG. 1

T. T. BROWN

ELECTROKINETIC GENERATOR

Long before completing his education, or progressing along his impressive career, Brown would bring his discovery to Prof. Biefeld. Prof. Biefeld latched on to Brown's discovery and used his tenure to get this phenomenon officially recognized in physics. Thomas Townsend Brown's discovery bears his name to this day: The Biefeld-Brown Effect."

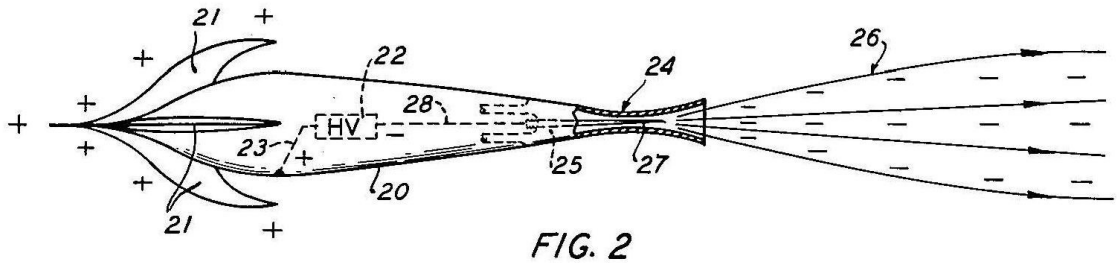

FIG. 2

T. T. BROWN

ELECTROKINETIC GENERATOR

Impressive is definitely the word to use to describe Brown's career: Naval Research Laboratory, International Gravity Expedition to the West Indies, Johnson Smithsonian Deep Sea Expedition, Officer-in-charge Atlantic Fleet Radar Material School, Atlantic Fleet Gyrocompass School, Materials and Processes Engineer at Glenn LD Martin Aircraft Co. Baltimore, Md., Radar Consultant at Lockheed Aircraft Co. Consulting physicist at Pearl Harbor Navy Yard, Bahnson Laboratories…

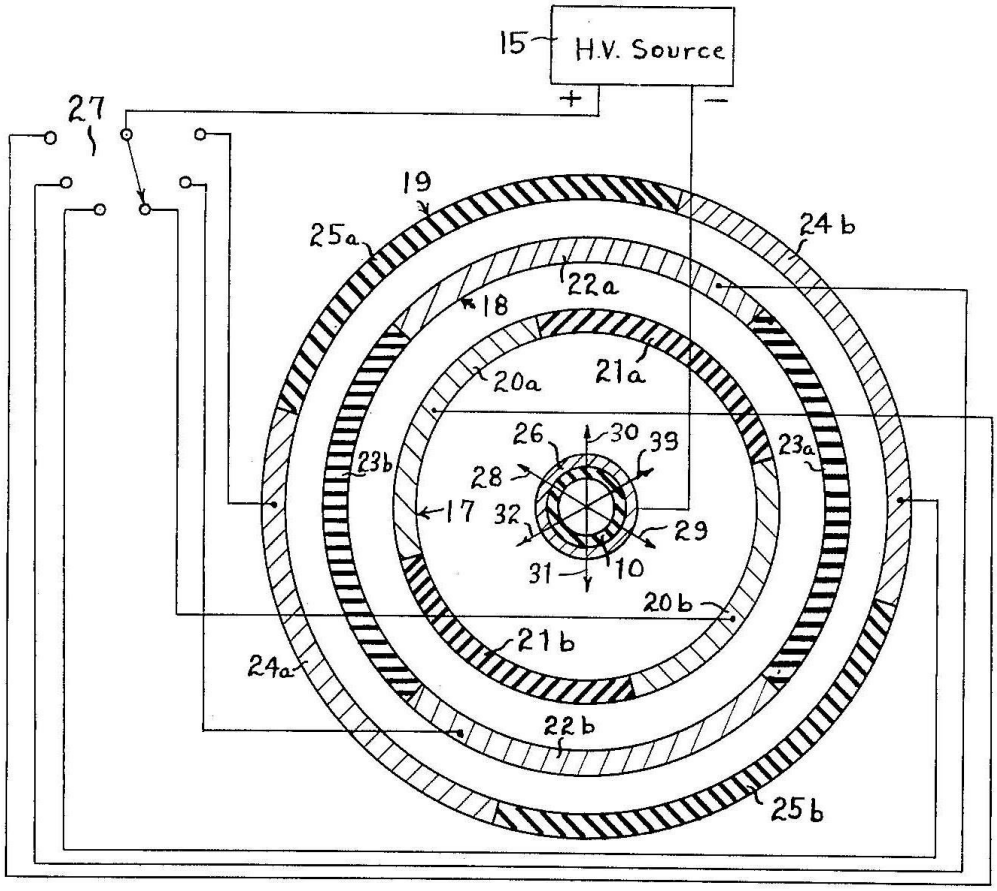

ELECTRICAL THRUST PRODUCING DEVICE

His work with high voltages would spark (no pun intended) the development of the UFO as a classified project in the United States, coming to open testing in the late 1940's. Brown's work was classified for decades, and the fact that any portion of it has been released is practically a miracle in itself. But much of it is available,

and you can read more about TT Brown in Volume II of the UFO How-To series, “Electrogravitics.

While Brown’s work helped solidify Tesla’s dream of the “perfect flying machine,” it was the work of Wallace that made it a reality.

Henry W. Wallace: A brilliant scientist who worked for GE Aerospace and GE Re-Entry Systems, he discovered and openly patented the secret of inertia and gravity shielding. It is because of Wallace that we understand how pilots and passengers can travel in a craft moving at thousands of miles per hour, making right angle or sharper maneuvers without being crushed by the G-Forces generated.

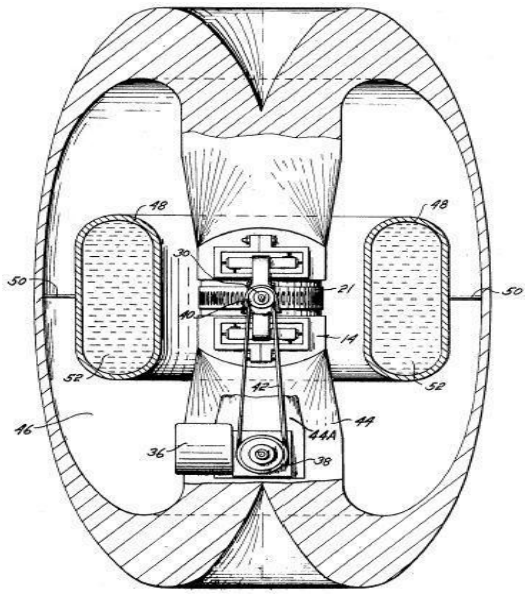

His patents titled “Method And Apparatus For Generating A Dynamic Force Field”, and “Method And Apparatus For Generating A Secondary Gravitational Force Field” expose the miracle of gravitational and inertial shielding, and generating electrogravitic propulsion. You can read these in Volume II of the UFO How-To series, “Electrogravitics.

In those patents, Wallace details the missing secrets from Brown’s work, that the way to create shielding of inertia and gravity is by using materials with significantly high ratio of odd nuclear spin

values (the proportions of the nucleus are not balanced, it is not about radioactivity). You can learn more about this in the two free videos I've posted at Flash Presentation Part I and Flash Presentation Part II.
.

And don't confuse "lifter technology" with electrogravitic propulsion. **That's like confusing a hot-air balloon with a surface-to-air missile**.

But Wallace' work wasn't just about shielding, it was about propulsion.

These same materials with odd nuclear spin values can harness the propulsive effect mechanically. That's why Wallace patented inertial transmission and variable speed gearing devices that rotated at such high speeds.

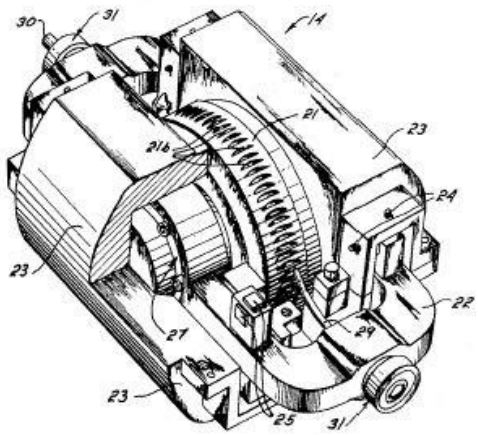

If a person were to hook up a device like Tesla's turbine, which is capable of tens of thousands of revolutions per minute safely, to Wallace' gearing and transmission system, in turn rotating his mechanical secondary gravitational force generator (Wallace' overall plan), you could design a UFO capable of the high speeds, intense maneuvers, that is gravitationally and inertially shielded, without the high voltage electricity pulses.

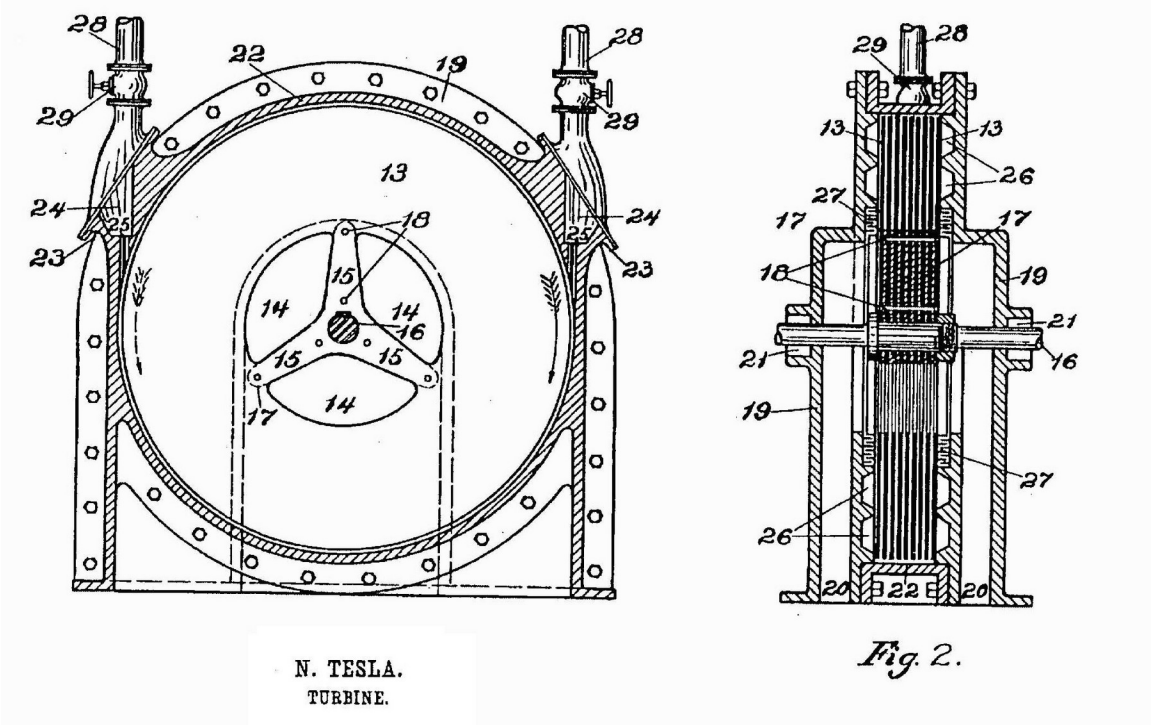

Nicholas Christofilos: Christofilos is the father of Fusion Theory as we understand it today because his discovery of the “Magnetic Bottle.” Like all truly brilliant minds, his discovery was attempted to be usurped by members of academia who tried to steal his work and take credit for his discoveries. The right circumstances shed light on the fact that his work was first in this field, and history has been corrected, but it almost wasn’t so. You can read more about Christofilos’ magnetic bottles, fusion reactors, astrons and other inventions of Volume V of the UFO How-To series.

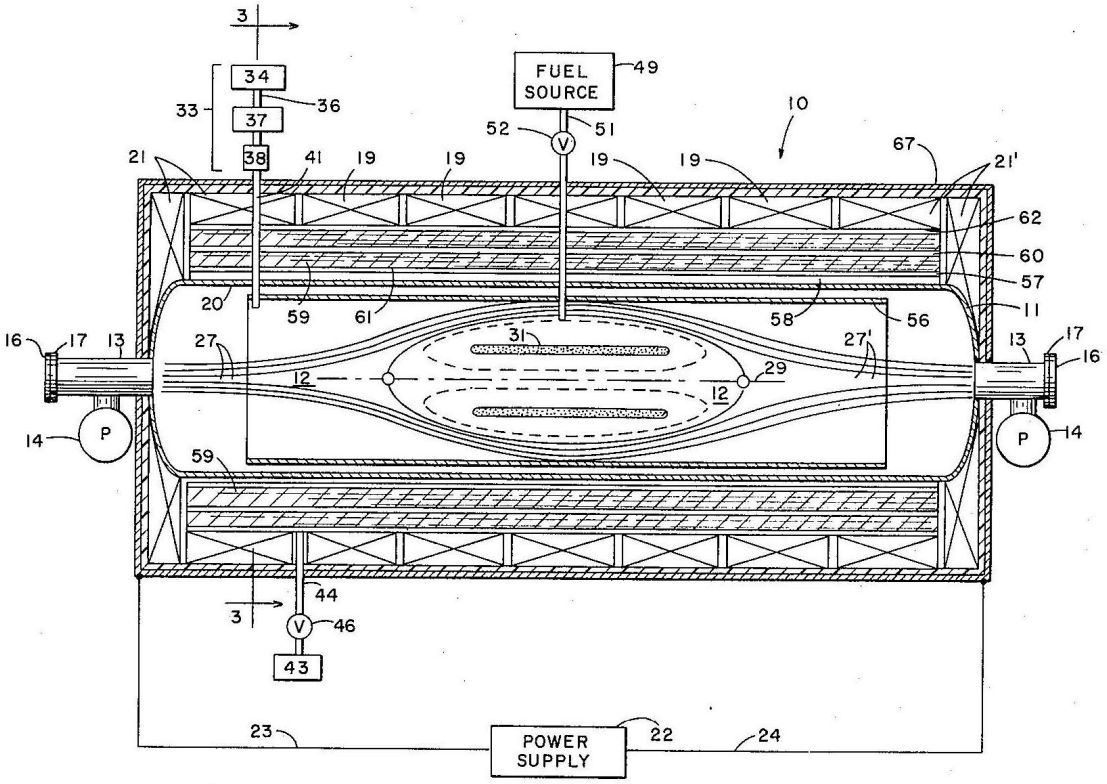

PROTON E-LAYER ASTRON FOR PRODUCING CONTROLLED FUSION REACTIONS

So to all you garage tinkerers and home lab researchers, NEVER GIVE UP if someone tries to steal your work!

RECAP

I broke down the main UFO types into the six main books:

1) Flying saucers, whether powered by air, gyro, or by gravity waves.
2) Electrogravitic. Dynamic force thousands of times stronger than gravity.
3) Plasma Propulsion. Think of rockets that run on lightning.

4) Magnetohydrodynamic. These are the 'glowing balls of light' people see.
5) Fusion. The catch all category for fusion, fission, and antimatter drives.
6) Inertial. Mechanical momentum powered craft.

There is also a book entirely on Electromagnetic UFO Theory. This book has become popular because it's the only one where 'defensive' systems are discussed. Everyone who wants to create a Star Trek, Star Wars, Farscape, or whatever kind of reality can find that type of 'hostility-deterrent' technology explained here. (Who knows what we may find in the solar system or beyond!)

I've dedicated an entire section on my site to answering the most frequent questions about UFOs and the books. It's at my Q & A page.

I broke down power systems technology into three main categories:

1) Hydrogen power systems. Splitting water for power is easier than you think.

2) Permanent magnet systems. They can be self-powered, and over-unity.

3) Esoteric power systems. From engines with no input or exhaust, to those that recycle atomic waste, run by the Casimir effect, run on cosmic rays, or even run on sound, all these devices are catalogued here.

These power systems technologies can be used for all kinds of "green" applications. They can power homes, factories, automobiles, airplanes…

Recently I produced a new book about Navigation and Communication Systems. But this is not the only book that discusses that. The same 300 or so pages of patent that discuss 'hostility-deterrent' in Electromagnetic UFO Theory also discuss application for "telecommunication" and as an "illuminator for an active sensor and/or guidance system."

If you're thinking that the 600 or so pages of each of these books are too much for you to digest, you can start with The Basics. At a mere 118 pages, this book touches on one example of each of the main propulsion types with about a quarter of the content in commentary. Yes, even with this smaller book you will still be armed with enough public domain (no royalties to pay if you build a UFO!) information to build UFO craft.

So why did I provide this? Because I found the answer to the question of "Does man possess UFO technology." I'm tired of TV shows that never give answers, books that never give answers, public speakers that charge too much money to come and talk about UFOs without giving real answers. We *do* possess this technology and the *technical layouts are available for you to review*.

I found out we can build them, and I want a spotlight shined on it.

We can use this to save the environment, save the economy, and help prevent global over-population. We can use these technologies to start the next great human expansion into the solar system and beyond. I talk about this in my prospectus, which you can read in full here, if you want.

I am so serious about this that I have started a Trust to fund the project of building these craft and will show the results here. The Trust has been granted public charity tax exempt status. You or anyone could make a donation to the Trust and take it as a tax write-off.

MORE INFORMATION

Do you want to read the interview with Changing Planet? Click here.

Do you want to read Michael Knight's Earth Change Report? Click here.

Do you want to hear the radio interview with Kevin Smith? Click here.

Do you want to hear the radio interview on Coast to Coast? Click here.

Do you want to read the first press release? Click here.
Do you want to read the second press release? Click here.
Do you want to read the third press release? Click here.

Have you read the Q & A at http://www.ufohowto.com/Q%20and%20A.htm?

Have you seen all the free videos at http://www.ufohowto.com/video.htm?

Have you read the reviews from others who bough the books?

[http://www.ufohowto.com/REVIEWS.htm]

I want to spread the word, to open the reality that the space-age life we were all promised from the time we first went to school is now in our grasp. Here's your chance to grab it. I've included a patent not otherwise in the books, below, so that you can see there are many ways to build a UFO craft.

that the extent of repulsion existing between any two charge fields depends on the difference in frequency together with electron amplitude and amperage that exists between the two charge fields.

It is the primary object of the invention to provide a controllable magnetic field or repulsion in a vertical direction between the earth and the apparatus described herein.

It is another object of the invention to provide a means of propulsion in a direction parallel to the earths surface.

The subject matter of the invention uses the dual aspect of natural law to provide repulsion in a vertical direction against the magnetic field of earth.

The invention will be described with reference to the following accompanying diagrams in which;

Fig. 1 is a diagram illustrating the layout of the apparatus in plan view showing the three concentric conducting rings together with three symmetrically placed static condensers positioned between the central and inner ring.

Fig. 2 is a diagram illustrating a side view through part of the diameter showing conducting rings in section together with their respective magnetic fields indicated as being in a state of repulsion against the magnetic field of earth.

Referring now to Fig. 1, there is shown the set of three circular concentric conducting rings T1,T2,T3 of suitable section shape and distance apart, energised by free electrons flowing through them from a source not shown for simplicity. Such electrons possess suitable values of amperage, frequency and amplitude these values being similar to or higher than those values consistent with the 2537 AU spectral line. To cause repulsion between the earth and the apparatus the electron flow in the rings is as follows, in rings T1 and T3 the flow is in a clockwise direction, in ring T2 the flow is in an anti-clockwise direction. Such directions of electron flow causes areas of high magnetic intensity below and around the apparatus giving sufficient repulsion against the earths magnetic field to cause the apparatus to move upwards. The rate of motion may be controlled by varying the values of frequency, amplitude and amperage of the electron flow.

To provide motion in a direction parallel to the earths surface three symmetrically arranged spherical condensers X,Y,Z, are incorporated within the above apparatus. These condensers are charged with either positive or negative static charges from a source of supply not shown for simplicity, each condenser may posses either charge and act with either of the other two. As is known any body possessing both positive and negative charges under suitable conditions will move through a magnetic field with the positive charge leading. By possessing these positive and negative charges the three condensers will cause both attraction and repulsion of the earths magnetic field and motion of the apparatus will result. The direction of the apparatus may be altered by heavily charging the condensers with the required charge. Both parts of the apparatus may operate together or separately, suitable insulation between the condensers may be provided as required.

Referring now to Fig. 2, there is shown a sectional view through part of the rings T1, T2, T3, showing the undersurface of the rings as being extensively flat in order to present a charged area as large as is reasonable facing downwards. The magnetic field indicated by dashed lines is that formed by the current flowing through the rings such that repulsion takes place between the earth and the apparatus.

The invention has been described by way of illustration of an application of the dual properties of natural law, these allow a state of repulsion as well as attraction to exist between two charge fields. The rate of repulsion will depend on the extent of the energy differential existing between the two charge fields. Repulsion between the apparatus and the earth will be modified by the other aspects of nature existing at the point of operation.

WHAT I CLAIM IS:—

1. A process and apparatus for obtaining controlled repulsion against the magnetic field of earth by means of three magnetic fields acting in the same plane in conjunction with each other, being formed by free electron flow on three concentric circular rings, said electrons are of such a nature that there exists a magnetic field of repulsion between the apparatus and the earths surface, together with apparatus for providing motion in a direction parallel to the earths surface by means of three suitably arranged spherical condensers possessing either positive or negative charges, the polarity of said charges on any of the said condensers being interchangeable, said charges acting on the earths magnetic field being repelled or attracted according to polarity.

2. A process and apparatus according to claim 1 wherein a field acting in opposition to the earths magnetic field may be produced by providing an electron flow in the central ring opposite to the electron flow of the outer and inner rings respectively, a field acting in conjunction with earths magnetic field is formed by the said electron flow in all said three rings being in the same direction.

3. A process and apparatus according to claims 1 and 2 wherein repulsion between the magnetic field of earth and the field generated by the said concentric rings may vary according to the field density together with the amplitude and amperage of the said electron flow through the conducting rings.

4. A process and apparatus according to claims 1 and 2 wherein the said apparatus for causing repulsion against the earths magnetic field may operate either together or apart from the said apparatus for causing motion parallel to the earths surface.

V. G. CRAWFORD.

Printed for Her Majesty's Stationery Office by the Courier Press, Leamington Spa, 1969.
Published by the Patent Office, 25 Southampton Buildings, London, W.C.2, from which copies may be obtained.

4. A process and apparatus according to claims 1 and 2 wherein the said apparatus for causing repulsion against the earths magnetic field may operate either together or apart from the said apparatus for causing motion parallel to the earths surface.

V. G. CRAWFORD.

Printed for Her Majesty's Stationery Office by the Courier Press, Leamington Spa, 1969.
Published by the Patent Office, 25 Southampton Buildings, London, W.C.2, from which copies may be obtained.